INSTALLATION AND OPERATING INSTRUCTIONS

Models: Start with the prefix ECO 4000:
350L, 500L

ECO-4000

INTENDED FOR OTHER THAN HOUSEHOLD USE

RETAIN THIS MANUAL FOR FUTURE REFERENCE
UNIT MUST BE KEPT CLEAR OF COMBUSTIBLES AT ALL TIMES

FOR YOUR SAFETY: Do not store or use gasoline or other flammable vapors and liquids in the vicinity of this or any other appliance.

WARNING: Improper installation, adjustment, alteration, service or maintenance can cause property damage, injury or death. Read the Installation, Operating and Maintenance Instructions thoroughly before installing or servicing this equipment.

Improper installation, adjustment, alteration, service or maintenance can cause property damage, injury or death. Read the Installation, Operating and Maintenance Instructions thoroughly before installing or servicing this equipment.

This equipment has been engineered to provide you with year-round dependable service when used according to the instructions in this manual and standard commercial kitchen practices.

Intertek

Intertek

P/N 8898810 5/12

Phone: +1 (214) 421-7366
Fax: +1 (214) 565-0976
Toll Free: +1 (800) 527-2100
Website: www.apwwyott.com
E-mail: info@apwwyott.com

APWWYOTT
729 Third Avenue
Dallas, TX 75226

IMPORTANT FOR FUTURE REFERENCE

Please complete this information and retain this manual for the life of the equipment. For Warranty Service and/or Parts, this information is required.

Model Number	Serial Number	Date Purchased

TABLE OF CONTENTS

SECTION	ITEM	PAGE	SECTION	ITEM	PAGE
1	Owner's Information	2	7	Cleaning	5
2	Safety Information	2	8	Troubleshooting	6
3	Safety Signs and Messages	3	9	Preventative Maintenance	6
4	Specifications	3	10	Wiring Diagrams	7
5	Installation Instructions	4	11	Parts Lists & Exploded Views	8
6	Operation	5	12	Warranty	12

WARNING: In Europe, appliance must be connected by an earthing cable to all other units in the complete installation and thence to an independent earth connection in compliance with EN 60335-1 and/or local codes.

WARNING: An earthing cable must connect the appliance to all other units in the complete installation and from there to an independent earth connection.

1) OWNER'S INFORMATION

General Information:

1. Always clean equipment thoroughly before first use. (See general cleaning instructions).
2. Check rating label for your model designation and electrical rating.
3. For best results, use stainless steel counter tops.

General Operation Instructions:

1. All food-service equipment should be operated by trained personnel.
2. Do not allow your customers to come in contact with any surface labeled "CAUTION HOT".
3. Never touch quartz or steel heaters.

Warranty Information:

Reliability Backed By APW Wyott's Warranty:
All APW Wyott Toaster Ovens are backed by a one year parts and labor warranty, including On-Site Service calls within 50 miles of authorized service technicians.

Service Information:
Service Hotline (800) 733-2203

2) SAFETY INFORMATION

APW Wyott equipment is designed, built, and sold for commercial use and should be operated by trained personnel only. Clearly post all CAUTIONS, WARNINGS and OPERATING INSTRUCTIONS near each unit to insure proper operation and to reduce the chance of personal injury and/or equipment damage. This product is used for the cooking, defrosting or re-thermalization of food products only.

Always disconnect power before servicing the unit. Surfaces will remain hot after power has been turned off. Allow unit to cool before cleaning or servicing. Never clean the unit by immersing it in water. The unit is not protected against water jets; DO NOT CLEAN THE TOASTER OVEN WITH A WATER JET. Always clean equipment properly before first use.

3) Safety Signs and Messages

The following Safety signs and messages are placed in this manual to provide instructions and identify specific areas where potential hazards exist and special precautions should be taken. Know and understand the meaning of these instructions, signs, and messages. Damage to the equipment, death or serious injury to you or other persons may result if these messages are not followed.

⚠DANGER This message indicates an imminently hazardous situation which, if not avoided, will result in death or serious injury.

⚠WARNING This message indicates a potentially hazardous situation, which, if not avoided, could result in death or serious injury.

⚠CAUTION This message indicates a potentially hazardous situation, which, if not avoided, may result in minor or moderate injury. It may also be used to alert against unsafe practices.

NOTICE This message is used when special information, instructions or identification are required relating to procedures, equipment, tools, capacities and other special data.

4) SPECIFICATIONS

ECO 4000 (OR QST) MODEL	VOLTS	WATTS	PH
ECO 4000 -350L	120	1700	1
ECO 4000 -500L	208	2800	1
ECO 4000 -500L	240	2800	1

Power Cord:

Six (6) foot, 3 wire grounded cord. If the supply cord is damaged, the manufacturer, or an authorized service agent, must replace it in order to avoid a hazard and warranty. Please contact the factory by calling the 800 # located on the unit.

Shipping Weight:

ECO 4000-350L	ECO 4000-500L
54 Lbs (24.5 kg)	54 Lbs (24.5 kg)

5) INSTALLATION INSTRUCTIONS

If the carton appears damaged, or damage is discovered once the carton is opened, stop immediately and contact the freight company to file a damage claim.

⚠	**CAUTION:** The ECO TOASTER Oven is shipped assembled except for installation of the crumb tray assembly. Please remove all supports and packaging materials before operating the unit. Failure to remove all packaging materials may lead to a fire and / or damage to the appliance.	⚠

1. Remove all external packaging that is protecting top portion of unit
2. Remove unit from shipping container while in the upright position. The unit can be lifted out of the carton by grasping under the back side and the conveyor of the appliance. Please remove the plastic bag.
3. Remove all internal packaging to the unit, if present.
4. Visually inspect all external and internal portions of unit for damage. **Important: Inspect the Quartz elements located inside the oven tunnel after removal of packing material.** To inspect the quartz elements, use a small mirror held under and over each element to detect cracks. **Important: The quartz elements are fragile and will break under stress. Do not twist, pull, push, or otherwise subject the quartz elements to stress.**
5. Wipe down the exterior of the unit using a damp cloth with warm water. Do not use abrasive pads or cleaners as they will damage the stainless steel surface.
   NOTE: DO NOT USE CLEANERS OF ANY KIND ON THE QUARTZ HEATERS.
   Note: Ambient Conditions - Make sure that the operating location is in an area where the ambient temperature is held constant (minimum 70°F). Please avoid areas such as near exhaust fans and air conditioning ducts.
   Warning! Operating environment
   Ensure that operation location is at a reasonable distance from combustible walls and materials otherwise combustion or discoloration could occur. Do not cover the rear inlets or the side inlets and outlets. Restricting or covering the air inlets and outlets may cause the unit to overheat and **WILL** void your warranty.
   Caution! Operating environment
   Place unit on a stable, level counter at a convenient height for use. Turn the adjustable feet so that unit is level to counter top. The top of the unit is not intended for use a shelf. Materials placed there are at risk for fire.
6. Before plugging unit into wall, make sure that the power switch located on the back of “E” models and on the Front of the “L” model is in the off position.
7. ***Warning!*** Ensure no hands, tools or parts or other unintended items are located on the conveyor as injury will result when unit is turned on.
8. Plug unit into grounded electrical outlet with correct voltage, and plug configuration.
   Warning! Using any receptacle that is not designed to match the attached cord and plug MAY cause personal injury and WILL void your warranty. Please attach the ECO-4000, to an individual branch circuit.

6) OPERATION

1. The controls that operate the belt conveyor speed and the heaters are located on the front of the unit.

2. The On/Off switch is used to turn the unit on or off. Once the unit is turned on the conveyor will automatically run. Warning: Ensure no hands, tools or parts are located on the conveyor as injury will result when unit is turned on.

3. Note: Before moving the On / Off switch to the "On" position, please read the following statements:

4. A. **CAUTION! HOT SURFACES!** The exterior metal surfaces of the unit will get hot enough to cause burns. Avoid touching these surfaces to prevent injury.
   B. **WARNING! SEVERE BURN HAZARD QUARTZ HEATERS**. The quartz heaters or metal heaters located in the top of the unit operate at very high temperatures. **DO NOT TOUCH HEATERS AFTER UNIT IS TURNED ON.**

5. This oven has 2 heating zones, 1 above the conveyor, and one beneath the conveyor.

Operation Instructions for 350L and 500L

1. Turn the Power Switch on located on the rear of the unit. When the unit is “ON”, the conveyor belt will move.
2. Use the “TOP HEAT” and “BOTTOM HEAT” knobs to adjust to the desired temperature and achieve the toasting pattern. Knobs can be turned to an “OFF” position, turning off the heat in a full run mode. In “E-SAVE” mode, the elements (even if “OFF”) will cycle to keep cavity temperature up.
3. Use the conveyor speed control to get the desired toast quality – “DARK” will run the conveyor slower and “LIGHT” will run the conveyor faster.

7) CLEANING

Insure the appliance has been turned off and has had sufficient time for all surfaces to cool down before cleaning. Use only mild soap and water to clean this appliance. Appliance cleaning should be performed daily.

NOTE: DO NOT USE ABRASIVE CLEANING SOLUTIONS ON THIS APPLIANCE.

Daily Cleaning

- NEVER DIRECTLY SPRAY THE TOASTER WITH CLEANING CHEMICALS, SOLUTIONS, OR WATER. ALWAYS APPLY CLEANING SOLUTIONS TO A CLEANING TOWEL OR CLOTH.
- Remove the crumb pans and wipe out debris with a damp rag and mild soap solution.
- Using a damp rag with mild soap and water, wipe down the exterior surfaces of the appliance.
- Using a damp rag with mild soap solution, wipe down all areas of the conveyor. DO NOT ATTEMPT TO CLEAN THE QUARTZ OR METAL HEATERS.
- When units are in the stacked configuration, it is still necessary to clean between the units. Using a damp rag with mild soap and water, wipe down the tops and undersides of all units. Ensure there are no foreign objects between the units that could catch fire.

8) Using a damp rag with mild soap and water, wipe the surfaces of the stacking spacers on all four corners.

9) TROUBLESHOOTING

Always ask and check the following:

Not getting power:

1. Is the unit connected to a live power source of the proper voltage?
2. Check the rating label. Is the unit connected to the correct power source?
3. Check the circuit breaker.
4. Is power switch "ON"?
5. If the above checks out, and you still have problems, call your local service agent.

Conveyor not working:

1. Please refer to "Not getting power" section.
2. Check belt for obstructions. Belt may be jammed.
3. Note: At slower settings the conveyor moves very slow and may appear stalled, which is not the case.
4. If the above checks out, and you still have problems, call your local service agent.

Food not cooking properly:

1. Please refer to "Not getting power" section.
2. Is the controller and speed control adjusted to the desired setting? (See Product Key Programming section to check button parameters)
3. If the above checks out, and you still have problems, call your local service agent.

10) PREVENTATIVE MAINTENANCE SCHEDULE

- Please follow the cleaning section for the daily preventative maintenance schedule.
- DO NOT USE ABRASIVES OR CLEANING SOLUTIONS ON THIS APPLIANCE.
- Routinely check before every operation that adequate distance is allowed between fans and anything that would possibly allow foreign debris or substances to be taken in by inlet fan.
- Clean fan guards on a daily basis to ensure proper inlet cooling to electrical components and efficient hot air exhaust.
- On a daily basis make sure side walls of tunnel oven remain clean to assist in maintaining even cooking around product. Be careful not to bump or hit the quartz or metal heaters when wiping down.
- Ensure belt is properly tensioned as to prevent slippage or binding, which causes strain on motor.
- DO NOT ATTEMPT TO MAINTENANCE, SERVICE, OR CLEAN THE QUARTZ OR METAL HEATERS.

WIRING DIAGRAM –ECO 4000 350L & 500L

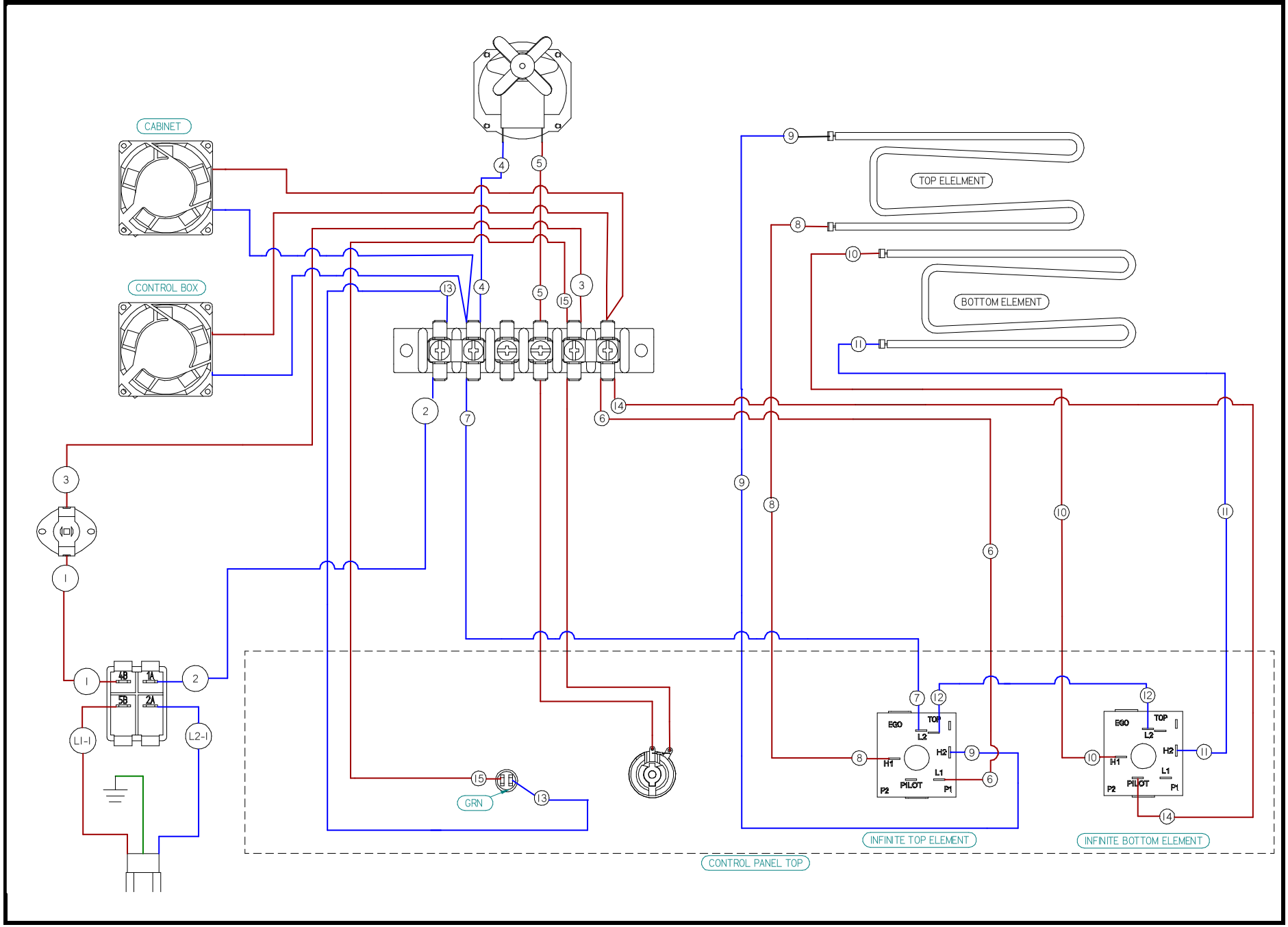

11) PARTS LISTS & EXPLODED VIEWS

EXPLODED VIEW ECO4000 350L & 500L

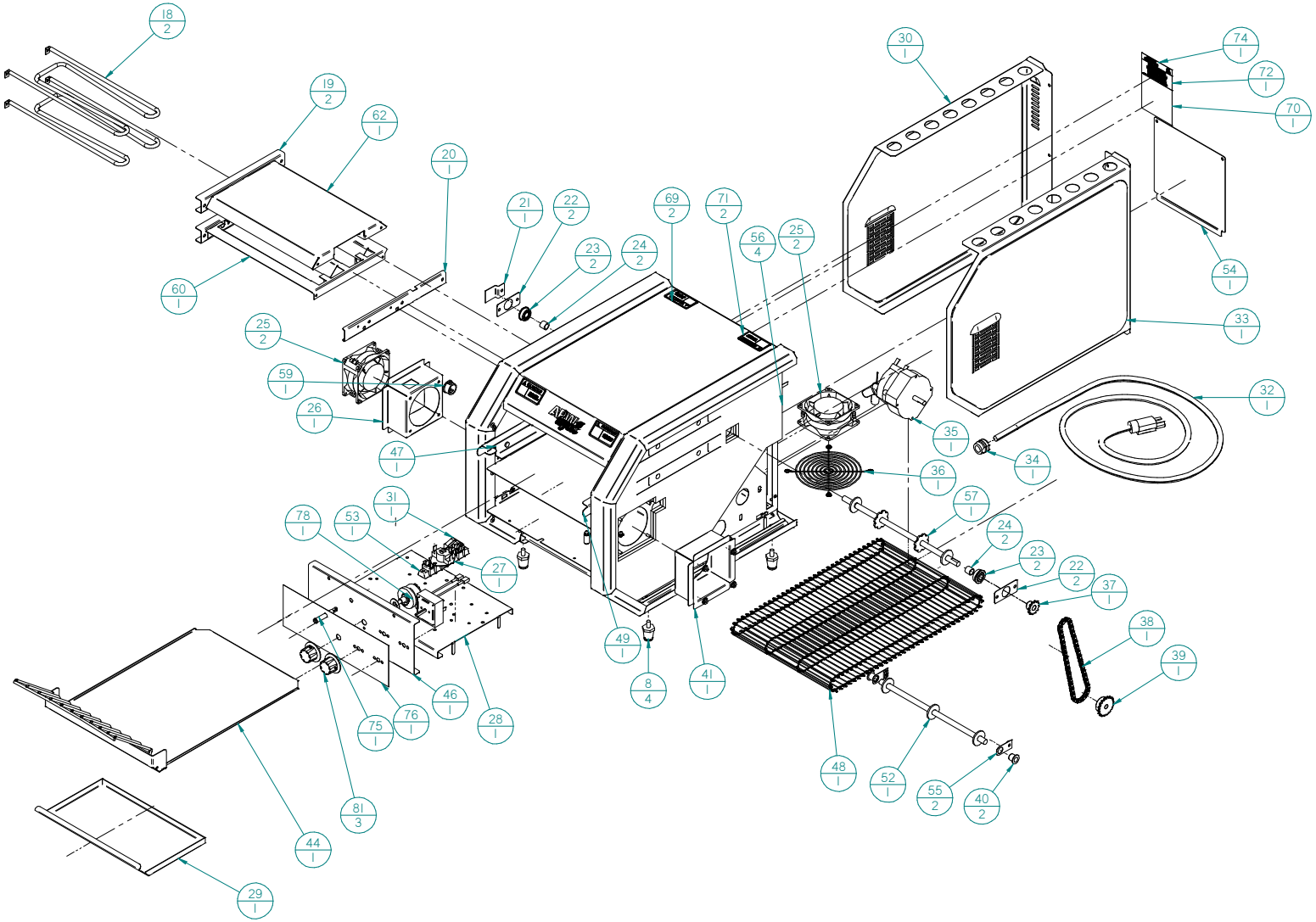

PARTS LISTS & EXPLODED VIEWS

ECO 4000 350L Parts Lists

ITEM	PART NUMBER	REQ'D	DESCRIPTION
31	1305612	1	SWITCH, ROCKER 20 AMP
30	21851438	1	PANEL, SIDE LEFT ECO
29	21851460	1	DRAWER, HOLDING ECO
28	21851459	1	BASE, COMPONENT MOUNTING ECO
27	1377000	1	HIGH LIMIT RESETTABLE OPEN @180
26	21851473	1	DUCT, FAN ECO
25	784680	2	FAN, AXIAL
24	48386800	2	SPACER, CONVEYOR SHAFT
23	48324800	2	BEARING, SHAFT
22	21851443	2	BRACKET, BEARING ECO
21	21851442	1	RETAINER, SHAFT
20	21851477	1	BRACKET, MOUNTING RTD ECO
19	21851453	2	BRACKET, ELEMENT CART. MOUNTING (L) ECO
18	93300017	2	ELEMENT, 120V 832W
17	8353000	61	POP RIVET
16	21851434	1	PANEL, BACK (E) ECO
15	21851433	1	PANEL, TOP INNER ECO
14	2065847	1	LOGO, APWWYOTT CASTED
13	8460900	2	NUT, PUSH 1/8"
12	21851428	1	PANEL, TOP ECO
11	21851424	1	SLIDE, TOAST ECO
10	21851432	1	BASE, BOTTOM FRONT ECO
9	8353600	14	RIVET, POP 3/16 FLUSH BREAK
8	86621-00	4	LEG 1" CHROME
7	8353200	4	RIVNUT, 1/4-20 THIN HEAD
6	21851475	2	RETAINER, PANEL FRONT ECO
5	21851476	2	RETAINER, PANEL SIDE ECO
4	21851426	1	HOUSING, END RS ECO
3	21851427	1	HOUSING, END LS ECO
2	21851425	1	PANEL,CTRL BOX BTM BCK ECO
1	21851423	1	PANEL,CTRL BOX TOP ECO

ITEM	PART NUMBER	REQ'D	DESCRIPTION
60	21851456	1	TRAY, ELEMENT BOTTOM (L) QST
59	89784-00	1	BUSHING, 7/8 SNAP, HEYCO
58*	8113910	8	SCREW,MACH. PAN HD. PH. 8-32 X 1-3/4 S/S
57	48395600	1	DRIVE SHAFT ASSY SEGMENTED BELT
56	21851468	4	INSULATION, ECO TOASTER (E)
55	21851441	2	CLIP BEARING ECO
54	21851451	1	COVER, ACCESS BACK ECO
53	1107200	1	BLOCK TERINAL, 6 STATION 600V
52	43812200	1	SHAFT & IDLER WHEEL W/ASSY
51*	8408300	44	#8-32 HEX NUT, KEPS, NI
50*	21851479	1	CORD, FAN HARNNESS
49	21851457	1	SIDE, CONVEYOR RS ECO
48	48292000	1	BELT, WIRE 27x.05 3 SEG.
47	21851458	1	SIDE, CONVEYOR LS ECO
46	21851444	1	PANEL, CONTROL ECO VL
45	21851431	1	BASE, BOTTOM BACK ECO
44	21851439	1	TRAY CRUMB
43	21851478	1	SIDE, LEFT (L) QST
42	21851472	1	SIDE, RIGHT (L) QST
41	21851463	1	DUCT, AIR ECO
40	43812500	2	BEARING FLANGED POLYMER
39	48326000	1	SPROCKET, 18 TOOTH 1/4 PITCH 5/16 BORE
38	48290100	1	CHAIN DRIVE 1/4 PITCH X 68
37	48326100	1	SPROCKET, 12 TOOTH 1/4 PITCH 3/8 BORE
36	31007-33	1	GUARD, FAN FINGER
35	48515200	1	MOTOR, GEAR 115V 60HZ
34	89792-00	1	STRAIN RELIEF
33	21851437	1	PANEL, SIDE RIGHT ECO
32*	1536500	1	CORDSET 12-3 SJTOW 5-20P 72"L

ITEM	PART NUMBER	REQ'D	DESCRIPTION
86*	21851409	1	COVER, CONTROL ECO-4000 HILTON
85*	21851489	1	INSUALTION, SIDE PANEL LS
84*	21851488	2	INSULATION, CTRL BOX BOTTOM
83*	21851487	2	INSULATION, CTRL BOX TOP & BACK
82*	21851499	1	COVER, INSUL.TOP & BCK ECO
81*	781189	3	ZYTRON KNOB
80*	13279-00	2	SWITCH INFINITE
79*	8511900	1	WASHER, FLAT 3/8
78	48322150	1	RHEOSTAT, 120V w/TERMINALS
77*	8105800	6	SCREW, PH, 6-32x3/8, S/S
76	21851484	1	DECAL ECO (L)
75	21851485	1	LIGHT, INDICATOR GREEN
74	8832600	1	LABEL, SERVICE HOTLINE
73*	21851492	1	HARNESS, WIRING ECO L
72	8837002	1	LABEL, DISCONNECT POWER
71	43813149	2	LABEL, WRN HOT SURF (FRNCH)
70	8861000	1	LABEL, SPEC
69	43813103	2	LABEL, WRNG, HOT SURFC
68*	770174	4	SCREW,MACHINE TR HD PH #10-24 X 3/4 SS
67*	81108-00	2	M/S TR HD PH 6-32x1"
66*	21851420	2	SPACER, NYLON
65*	8400100	8	NUT, HEX KEPS, #6-32
64*	8503000	2	WASHER, FLAT #8
63*	8134900	6	8-32 X 3/8 TR HD
62	21851465	1	TRAY, ELEMENT TOP (L) QST
61*	8130000	13	8-32 X 3/8 TYPE T

PARTS LISTS & EXPLODED VIEWS

ECO 4000 500L Parts List

ITEM	PART NUMBER	REQ'D	DESCRIPTION
31	1305612	1	SWITCH, ROCKER 20 AMP
30	21851438	1	PANEL, SIDE LEFT ECO
29	21851460	1	DRAWER, HOLDING ECO
28	21851459	1	BASE, COMPONENT MOUNTING ECO
27	1377000	1	HIGH LIMIT RESETTABLE OPEN @180
26	21851473	1	DUCT, FAN ECO
25	784682	2	FAN, AXIAL 230V
24	48386800	2	SPACER, CONVEYOR SHAFT
23	48324800	2	BEARING, SHAFT
22	21851443	2	BRACKET, BEARING ECO
21	21851442	1	RETAINER, SHAFT
20	21851477	1	BRACKET, MOUNTING RTD ECO
19	21851453	2	BRACKET, ELEMENT CART. MOUNTING (L) ECO
18	21851481	2	ELEMENT, 1400W @ 240V
17	8353000	61	POP RIVET
16	21851434	1	PANEL, BACK (E) ECO
15	21851433	1	PANEL, TOP INNER ECO
14	2065847	1	LOGO, APWWYOTT CASTED
13	8460900	2	NUT, PUSH 1/8"
12	21851428	1	PANEL, TOP ECO
11	21851424	1	SLIDE, TOAST ECO
10	21851432	1	BASE, BOTTOM FRONT ECO
9	8353600	14	RIVET, POP 3/16 FLUSH BREAK
8	86621-00	4	LEG 1" CHROME
7	8353200	4	RIVNUT, 1/4-20 THIN HEAD
6	21851475	2	RETAINER, PANEL FRONT ECO
5	21851476	2	RETAINER, PANEL SIDE ECO
4	21851426	1	HOUSING, END RS ECO
3	21851427	1	HOUSING, END LS ECO
2	21851425	1	PANEL,CTRL BOX BTM BCK ECO
1	21851423	1	PANEL,CTRL BOX TOP ECO

ITEM	PART NUMBER	REQ'D	DESCRIPTION
59	89784-00	1	BUSHING, 7/8 SNAP, HEYCO
58*	8113910	8	SCREW,MACH. PAN HD. PH. 8-32 X 1-3/4 S/S
57	48395600	1	DRIVE SHAFT ASSY SEGMENTED BELT
56	21851468	4	INSULATION, ECO TOASTER (E)
55	21851441	2	CLIP BEARING ECO
54	21851451	1	COVER, ACCESS BACK ECO
53	1107200	1	BLOCK TERINAL, 6 STATION 600V
52	43812200	1	SHAFT & IDLER WHEEL W/ASSY
51*	8408300	44	#8-32 HEX NUT, KEPS, NI
50*	21851479	1	CORD, FAN HARNNESS
49	21851457	1	SIDE, CONVEYOR RS ECO
48	48292000	1	BELT, WIRE 27x.05 3 SEG.
47	21851458	1	SIDE, CONVEYOR LS ECO
46	21851444	1	PANEL, CONTROL ECO VL
45	21851431	1	BASE, BOTTOM BACK ECO
44	21851439	1	TRAY CRUMB
43	21851478	1	SIDE, LEFT (L) QST
42	21851472	1	SIDE, RIGHT (L) QST
41	21851463	1	DUCT, AIR ECO
40	43812500	2	BEARING FLANGED POLYMER
39	48326000	1	SPROCKET, 18 TOOTH 1/4 PITCH 5/16 BORE
38	48290100	1	CHAIN DRIVE 1/4 PITCH X 68
37	48326100	1	SPROCKET, 12 TOOTH 1/4 PITCH 3/8 BORE
36	31007-33	1	GUARD, FAN FINGER
35	48514300	1	MOTOR, GEAR 230V 60HZ 9RPM
34	89792-00	1	STRAIN RELIEF
33	21851437	1	PANEL, SIDE RIGHT ECO
32*	15346-00	1	CORD, 14/3 HSJO NEMA 6-20P 72"

ITEM	PART NUMBER	REQ'D	DESCRIPTION
86*	21851409	1	COVER, CONTROL ECO-4000 HILTON
85*	21851489	1	INSUALTION, SIDE PANEL LS
84*	21851488	2	INSULATION, CTRL BOX BOTTOM
83*	21851487	2	INSULATION, CTRL BOX TOP & BACK
82*	21851499	1	COVER, INSUL.TOP & BCK ECO
81*	781189	3	ZYTRON KNOB
80*	13279-00	2	SWITCH INFINITE
79*	8511900	1	WASHER, FLAT 3/8
78	48322250	1	RHEOSTAT, 208/240V w/TERMINALS
77*	8105800	6	SCREW, PH, 6-32x3/8, S/S
76	21851484	1	DECAL ECO (L)
75	21851485	1	LIGHT, INDICATOR GREEN
74	8832600	1	LABEL, SERVICE HOTLINE
73*	21851492	1	HARNESS, WIRING ECO L
72	8837002	1	LABEL, DISCONNECT POWER
71	43813149	2	LABEL, WRN HOT SURF (FRNCH)
70	8861000	1	LABEL, SPEC
69	43813103	2	LABEL, WRNG, HOT SURFC
68*	770174	4	SCREW,MACHINE TR HD PH #10-24 X 3/4 SS
67*	81108-00	2	M/S TR HD PH 6-32x1"
66*	21851420	2	SPACER, NYLON
65*	8400100	8	NUT, HEX KEPS, #6-32
64*	8503000	2	WASHER, FLAT #8
63*	8134900	6	8-32 X 3/8 TR HD
62	21851465	1	TRAY, ELEMENT TOP (L) QST
61*	8130000	13	8-32 X 3/8 TYPE T
60	21851456	1	TRAY, ELEMENT BOTTOM (L) QST

NOTES:

12. APW WYOTT EQUIPMENT LIMITED WARRANTY

APW Wyott Food service Equipment Company warrants it's equipment against defects in materials and workmanship, subject to the following conditions:

This warranty applies to the original owner only and is not assignable.

Should any product fail to function in its intended manner under normal use within the limits defined in this warranty, at the option of APW Wyott such product will be repaired or replaced by APW Wyott or its Authorized Service Agency. APW Wyott will only be responsible for charges incurred or service performed by its Authorized Service Agencies. The use of other than APW Wyott Authorized Service Agencies will void this warranty and APW Wyott will not be responsible for such work or any charges associated with same. The closest APW Wyott Authorized Service Agent must be used.

This warranty covers products shipped into the 48 contiguous United States, Hawaii, metropolitan areas of Alaska and Canada. There will be no labor coverage for equipment located on any island not connected by roadway to the mainland.

Warranty coverage on products used outside the 48 contiguous United States, Hawaii, and metropolitan areas of Alaska and Canada may vary. Contact the international APW Wyott distributor, dealer, or service agency for details.

Time Period

One year for parts and one year for labor, effective from the date of purchase by the original owner. The Authorized Service Agency may, at their option, require proof of purchase. Parts replaced under this warranty are warranted for the un-expired portion of the original product warranty only.

Exceptions

* **Gas/Electric Cookline:** Models HCB, HCRB, HMG, HTG, HHP, HHPS, GCB, GCRB, GF, GGM, GGT, CHP-H, EF, EG, EHP. Three (3) Year Warranty on all component parts, except switches and thermostats. (2 additional years on parts only. No labor on second or third year.)
* **Broiler Briquettes, Rock Grates, Cooking Grates, Burner Shields, Fireboxes:** 90 Day Material Only. No Labor.
* **Heat Strips:** Models FD, FDL, FDD, FDDL. Two (2)Year Warranty on element only. No labor second year.
* **Glass Windows, Doors, Seals, Rubber Seals, Light Bulbs:** 90 Day Material Only. No Labor.

In all cases, parts covered by extended warranty will be shipped FOB the factory after the first year.

Portable Carry In Products

Equipment weighing over 70 pounds or permanently installed will be serviced on-site as per the terms of this warranty. Equipment weighing 70 pounds or under, and which is not permanently installed, i.e. with cord and plug, is considered portable and is subject to the following warranty handling limitations. If portable equipment fails to operate in its intended manner on the first day of connection, or use, at APW Wyott's option or its Authorized Service Agency, it will be serviced on site or replaced.

From day two through the conclusion of this warranty period, portable units must be taken to or sent prepaid to the APW Wyott Authorized Service Agency for in-warranty repairs. No mileage or travel charges are allowed on portable units after the first day of use. If the customer wants on-site service, they may receive same by paying the travel and mileage charges. Exceptions to this rule: (1) countertop warmers and cookers, which are covered under the Enhanced Warranty Program, and (2) toasters or rollergrills which have in store service.

Exclusions

The following conditions are not covered by warranty:

* Equipment failure relating to improper installation, improper utility connection or supply and problems due to ventilation.
* Equipment that has not been properly maintained, calibration of controls, adjustments, damage from improper cleaning and water damage to controls.
* Equipment that has not been used in an appropriate manner, or has been subject to misuse or misapplication, neglect, abuse, accident, alteration, negligence, damage during transit, delivery or installation, fire, flood, riot or act of god.
* Equipment that has the model number or serial number removed or altered.

If the equipment has been changed, altered, modified or repaired by other than an Authorized Service Agency during or after the warranty period, then the manufacturer shall not be liable for any damages to any person or to any property, which may result from the use of the equipment thereafter.

This warranty does not cover services performed at overtime or premium labor rates. Should service be required at times which normally involve overtime or premium labor rates, the owner shall be charged for the difference between normal service rates and such premium rates. APW Wyott does not assume any liability for extended delays in replacing or repairing any items beyond its control.

In all cases, the use of other than APW Wyott Authorized OEM Replacement Parts will void this warranty.

This equipment is intended for commercial use only. Warranty is void if equipment is installed in other than commercial application.

Water Quality Requirements

Water supply intended for a unit that has in excess of 3.0 grains of hardness per gallon (GPG) must be treated or softened before being used. Water containing over 3.0 GPG will decrease the efficiency and reduce the operation life of the unit.

Note: Product failure caused by liming or sediment buildup is not covered under warranty.

"THE FOREGOING WARRANTY IS IN LIEU OF ANY AND ALL OTHER WARRANTIES EXPRESSED OR IMPLIED INCLUDING ANY IMPLIED WARRANTY OF MERCHANTABILITY OR FITNESS FOR PARTICULAR PURPOSES AND CONSTITUTES THE ENTIRE LIABILITY OF APW WYOTT. IN NO EVENT DOES THE LIMITED WARRANTY EXTEND BEYOND THE TERMS STATED HEREIN."

9/05